Queen Mary
University of London
Science and Engineering

EBU4202: Digital Circuit Design
Digital System Blocks

Dr. Md Hasanuzzaman Sagor (Hasan)
Dr. Chao Shu (Chao)
Dr. Farha Lakhani (Farha)

School of Electronic Engineering and Computer Science,
Queen Mary University of London,
London, United Kingdom.

Buses

8607 3074

- Set of two or more electrical conductors representing a binary value

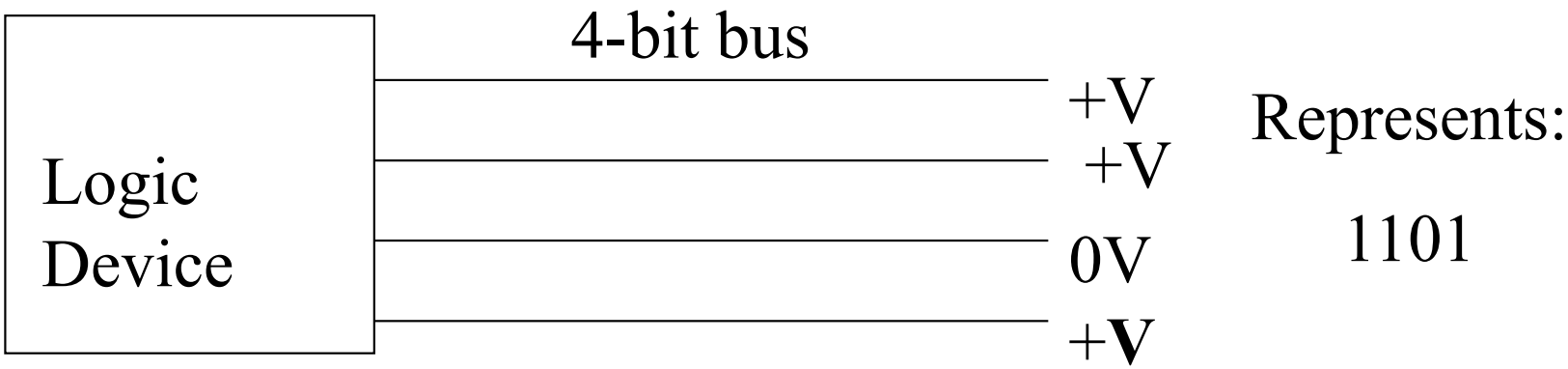

Buses

- Often more than just a one-to-one connection

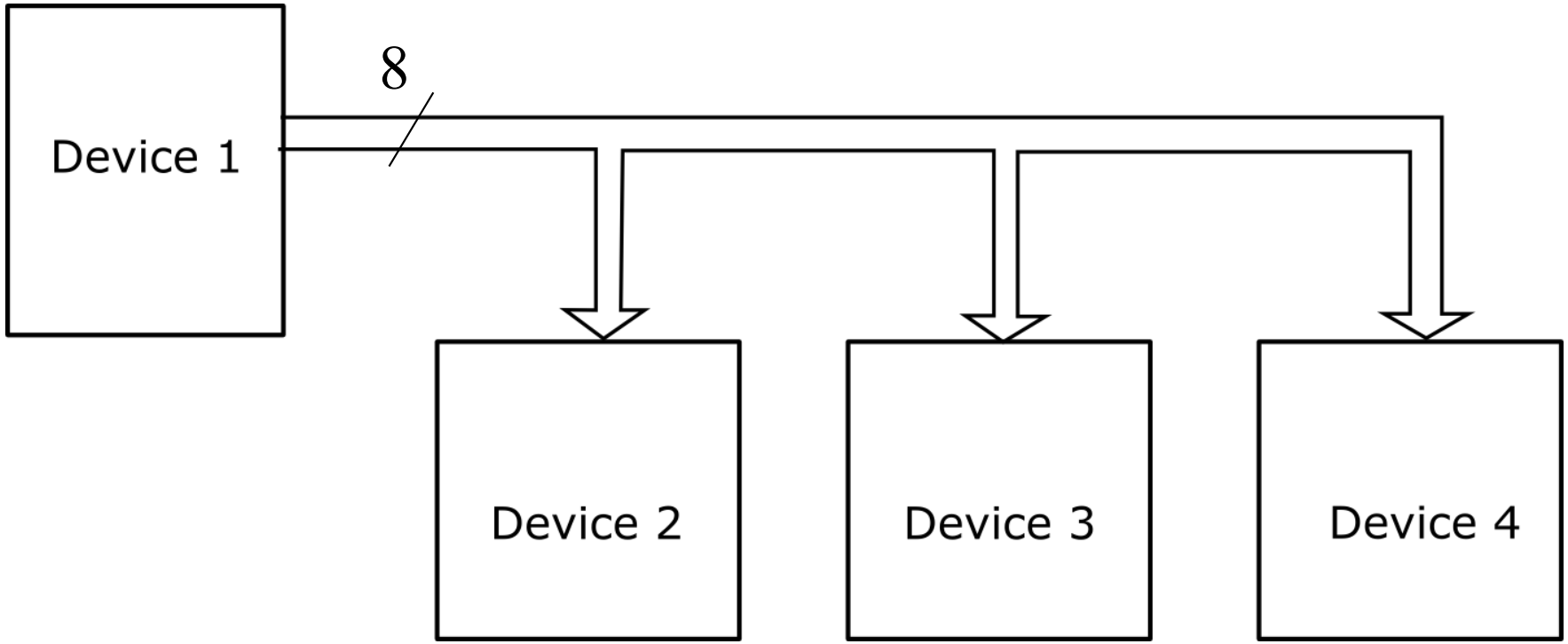

enable → write enable 是1 → 可以过去.

load → read

Buses

- Often more than just a one-to-one connection

serial bus

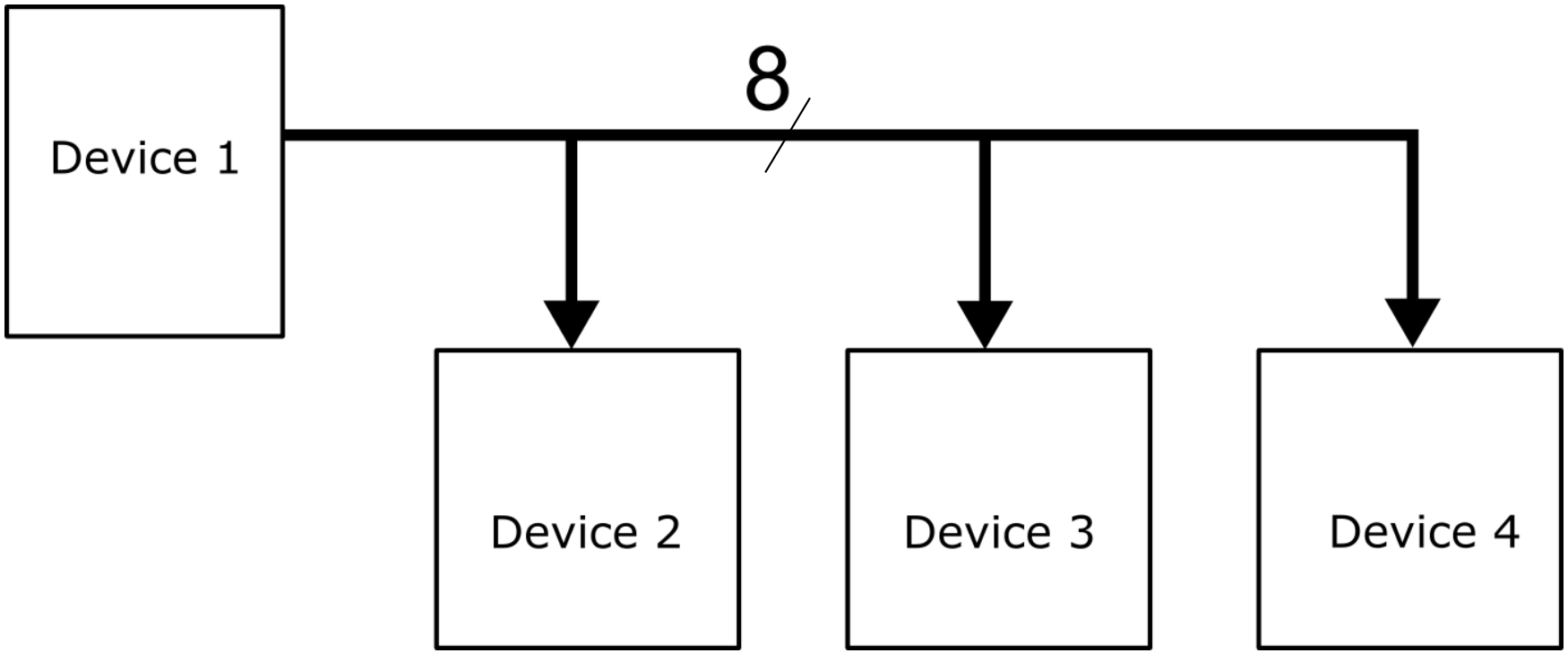

Selectors and Decoders

Queen Mary
University of London

Selectors or *Multiplexers*

- Often labelled MUX
- 2-Input Selector:

S_0	Output
0	I_0
1	I_1

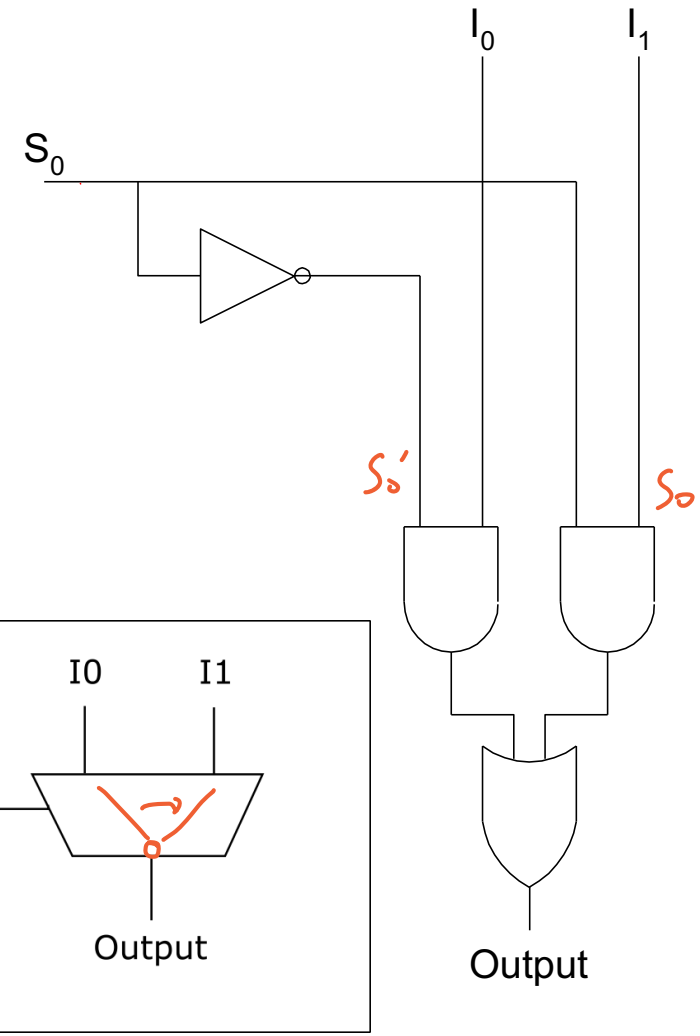

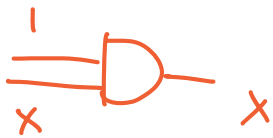

$1 \cdot x = x$

Selectors or *Multiplexers*

同一个东西

4-input Selector

S_1	S_0	Output
0	0	I_0
0	1	I_1
1	0	I_2
1	1	I_3

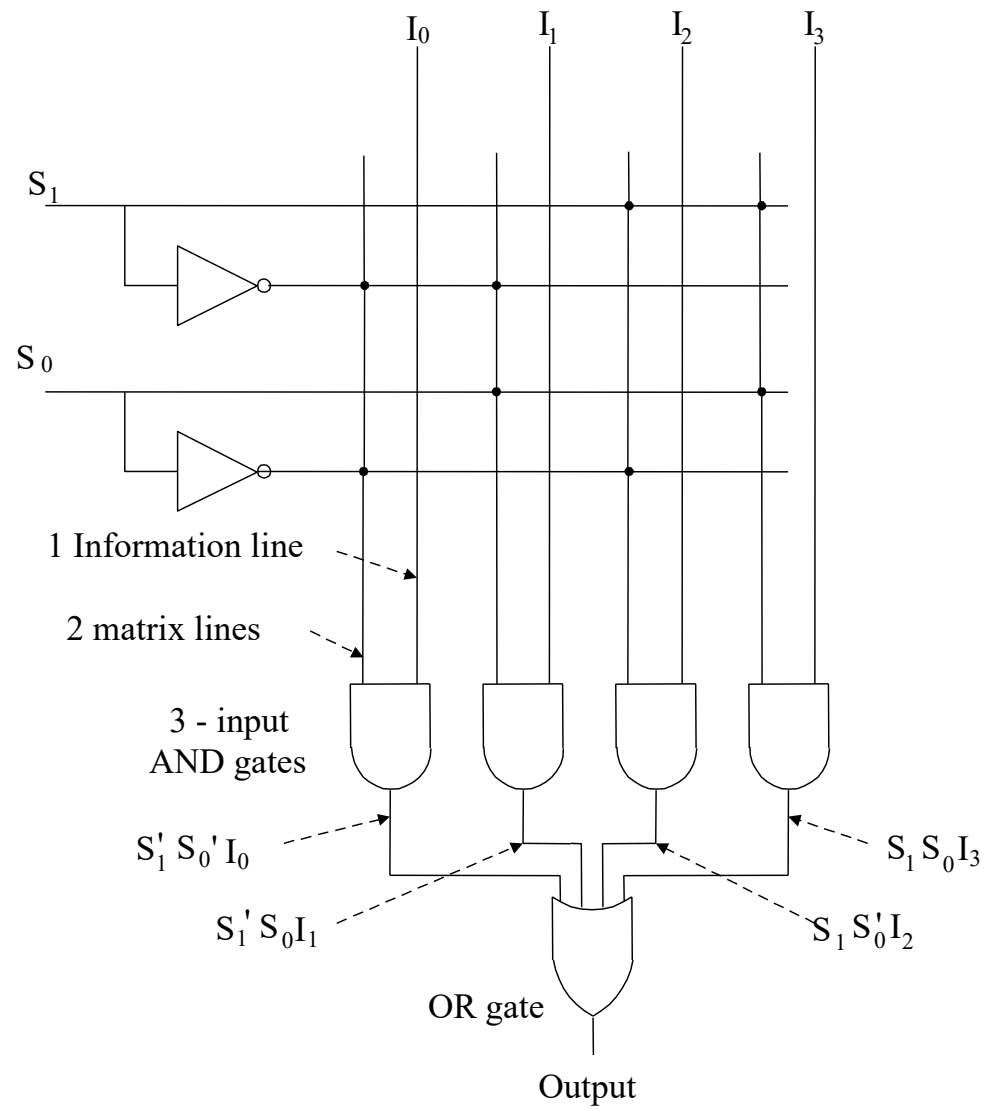

Multiplexers or Selectors

4-input Selector

S_1	S_0	Output
0	0	I_0
0	1	I_1
1	0	I_2
1	1	I_3

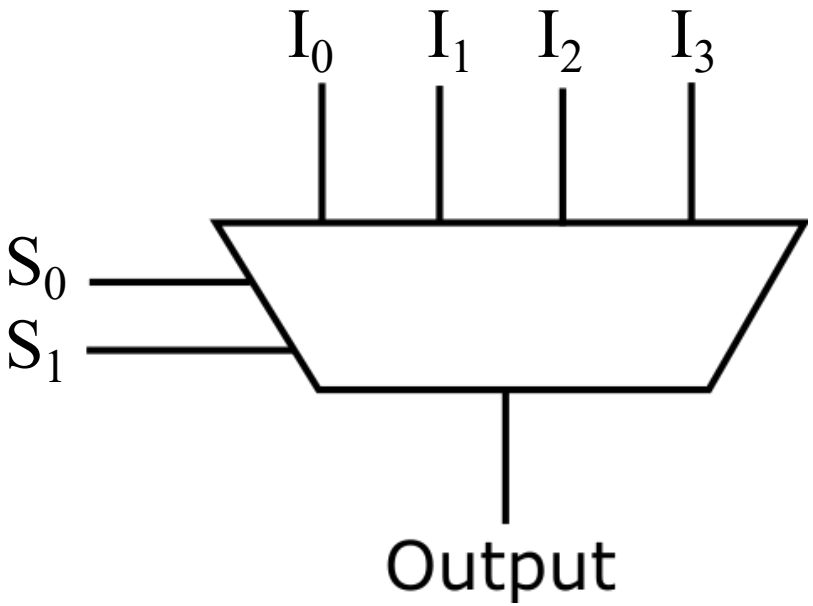

Multiplexers or Selectors

2-Input 4-bit MUX

每个 input 有4-bit

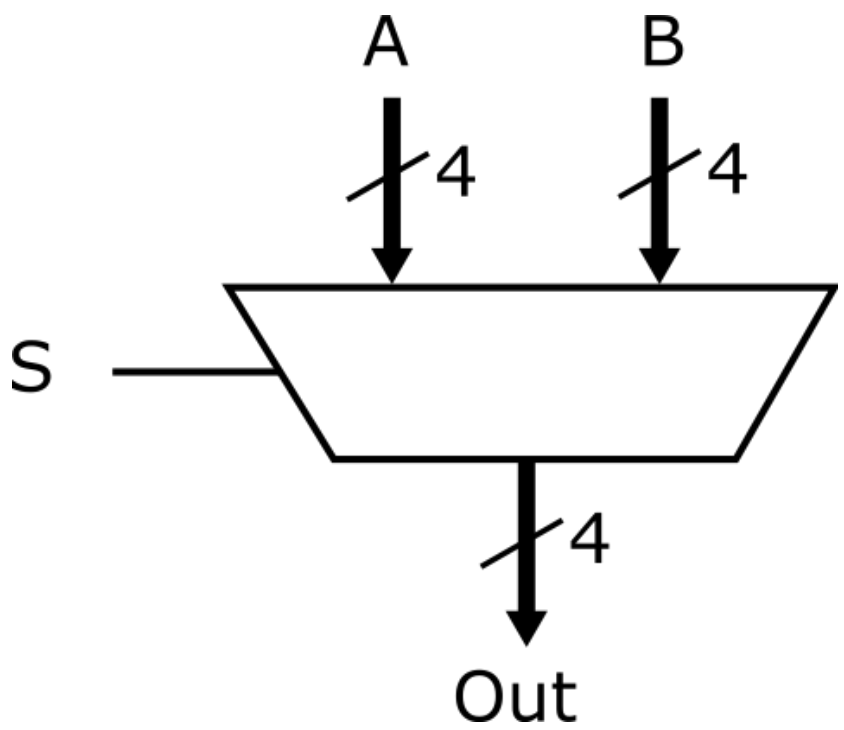

Multiplexers or Selectors

2-Input 4-bit MUX – Internal Implementation

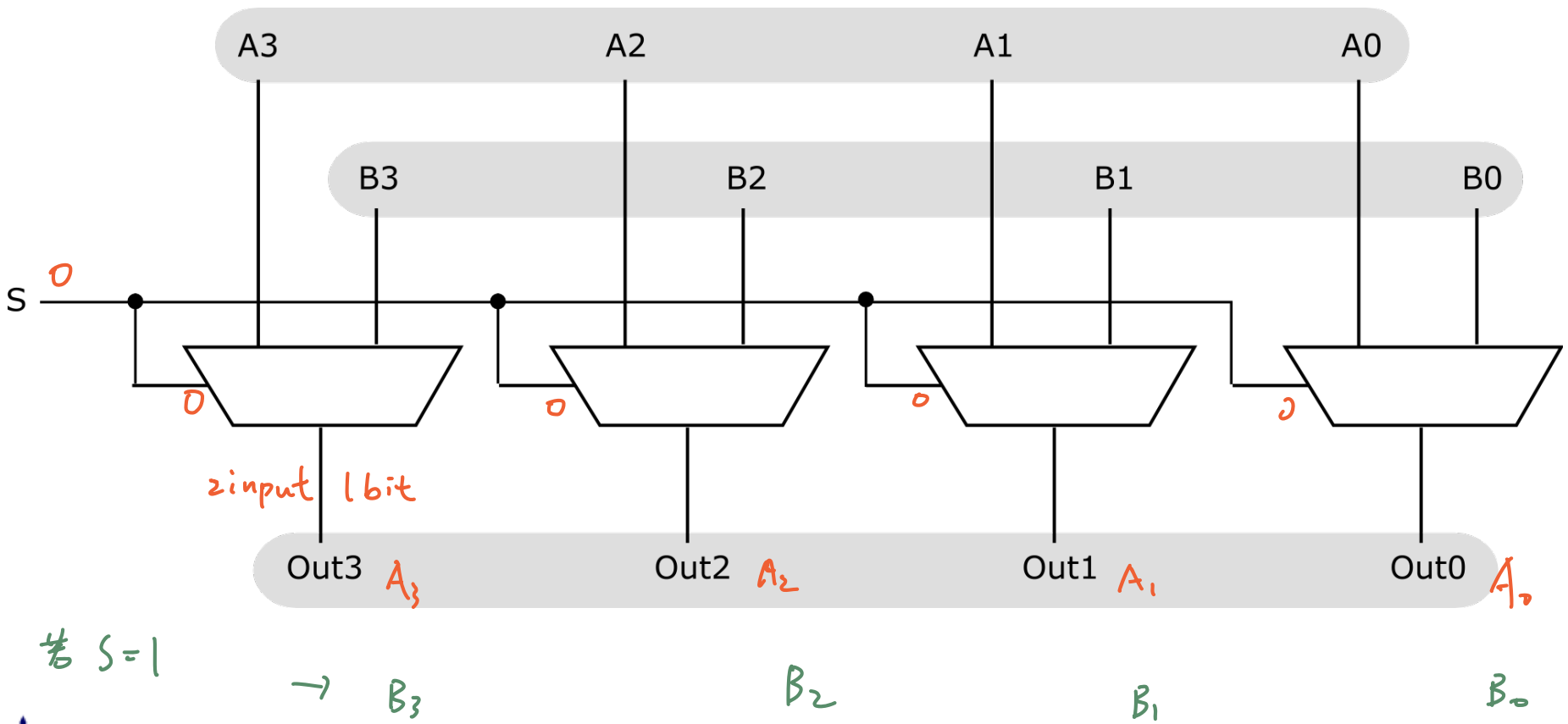

若 S=1 → B3 B2 B1 B0

Decoder or *Demultiplexer*

- Converts n number of binary information into 2^n number of output lines.
- Outputs 1 on the wire corresponding to the binary number represented by the inputs.

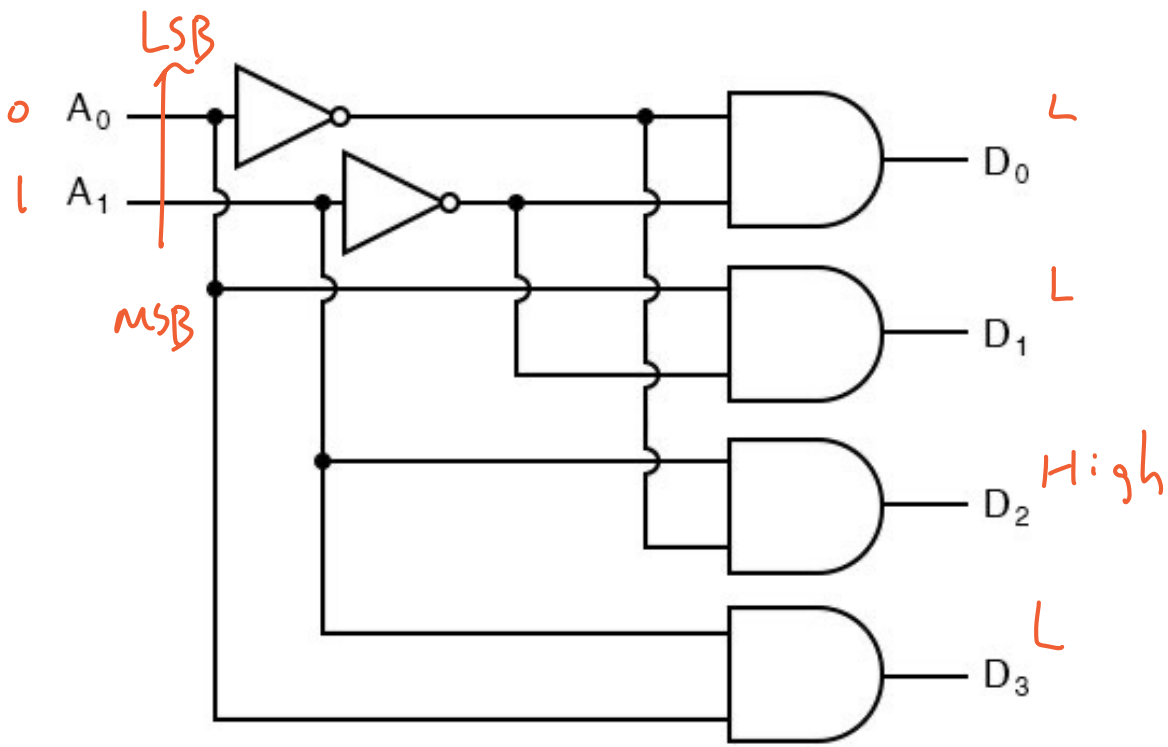

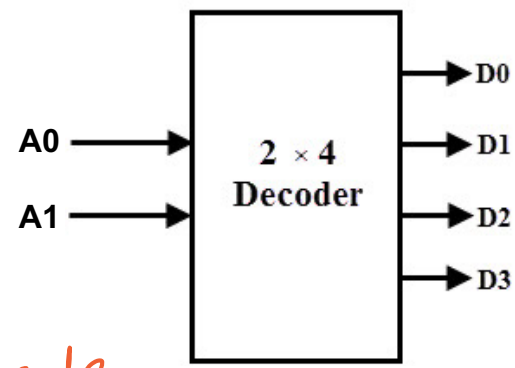

input code

output code.

A1	A0	D3	D2	D1	D0
0	0	0	0	0	1
0	1	0	0	1	0
1	0	0	1	0	0
1	1	1	0	0	0

3 D3

Magnitude Comparator (XNOR)

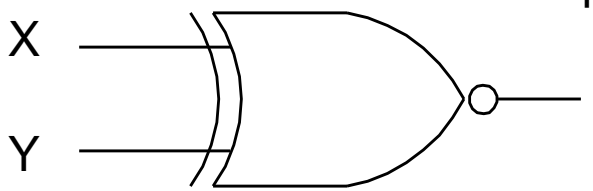

Output = (X'Y+XY')'
= XY+X'Y'

X	Y	Output
0	0	1
0	1	0
1	0	0
1	1	1

Basic comparator: 比较是否相等

- output when X = Y
- complement gives X ≠Y

Other types give: 大小比较.

- X > Y XY'
- X < Y XY
- complements give:
  - X ≤ Y X'+Y
  - X ≥ Y X+Y'

X>Y 1

X	Y	F
0	0	0
0	1	0
1	0	1
1	1	0

F = XY'

Queen Mary
University of London

Multiple-bit Magnitude Comparator

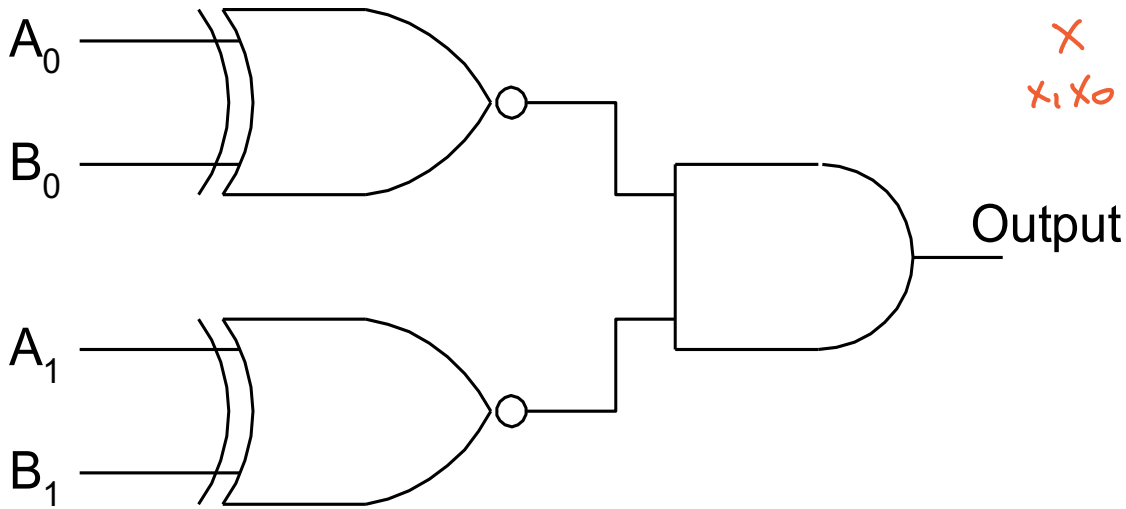

X
$x_1 x_0$

Y
$y_1 y_0$

2位数

分别比较

先MSB 再LSB.

For more than 1-bit comparisons, the XNORs are ANDed together

Exercise: Show that output of above 2-bit comparator is given by:

$A_0 \oplus B_0$ $A_1 \oplus B_1$

$$(A_0B_0 + A_0'B_0')\cdot(A_1B_1 + A_1'B_1')$$

Arithmetic Units

Queen Mary
University of London

Adders - the Half-adder

Half-adder:

- accepts two binary digit inputs (X & Y)
- produces Sum (S) & Carry (C) outputs

Arithmetically:

```
      X
      Y    +
  ---------
  C   S
```

X \ Y	0	1
0	0	1
1	1	0

Sum

$$S = X\overline{Y} + \overline{X}Y = X \oplus Y$$

Truth table: multiple input multiple output

X	Y	C	S
0	0	0	0
0	1	0	1
1	0	0	1
1	1	1	0

1+1 = 2

X \ Y	0	1
0	0	0
1	0	1

Carry

$$C = XY$$

Queen Mary University of London

Examples of half-adder implementations

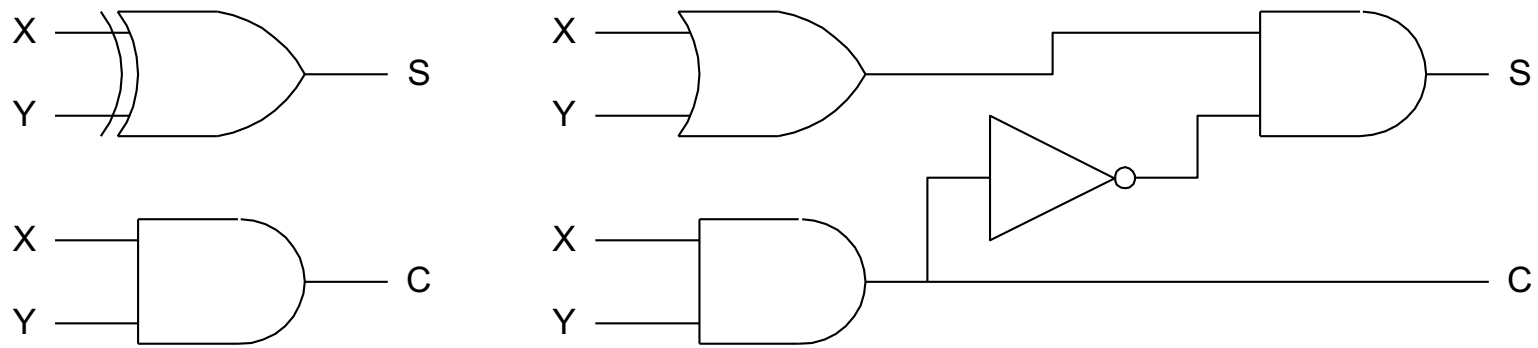

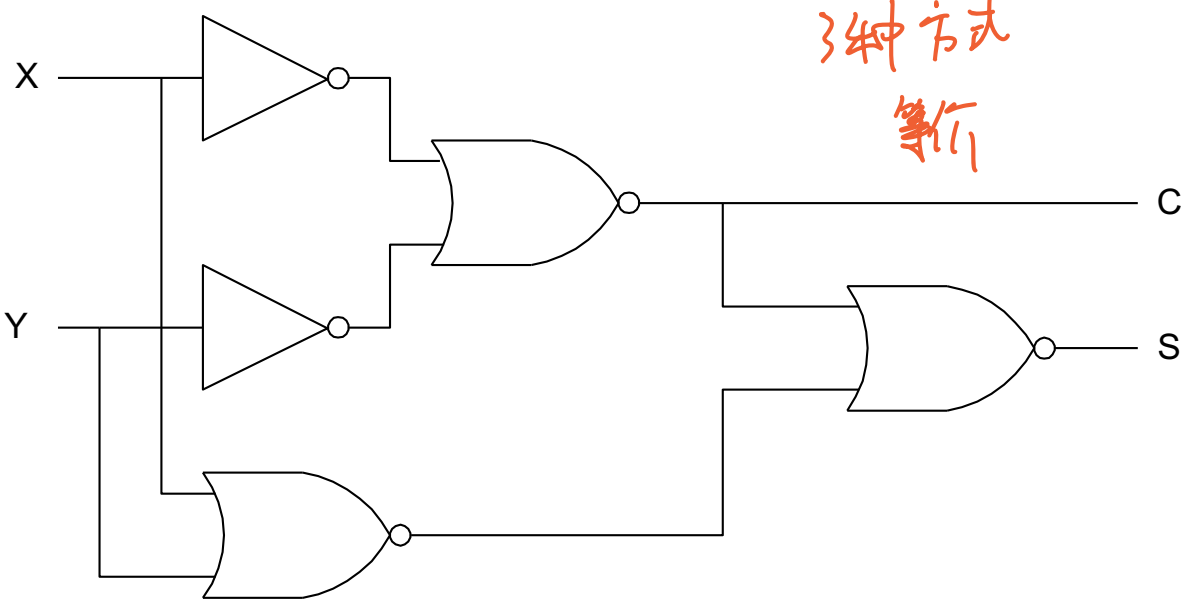

3种方式
等价

Exercise:

Show that for all circuits:

$$S = X\overline{Y} + \overline{X}Y$$

$$C = X \cdot Y$$

Queen Mary
University of London

Half-adder NAND gate implementation

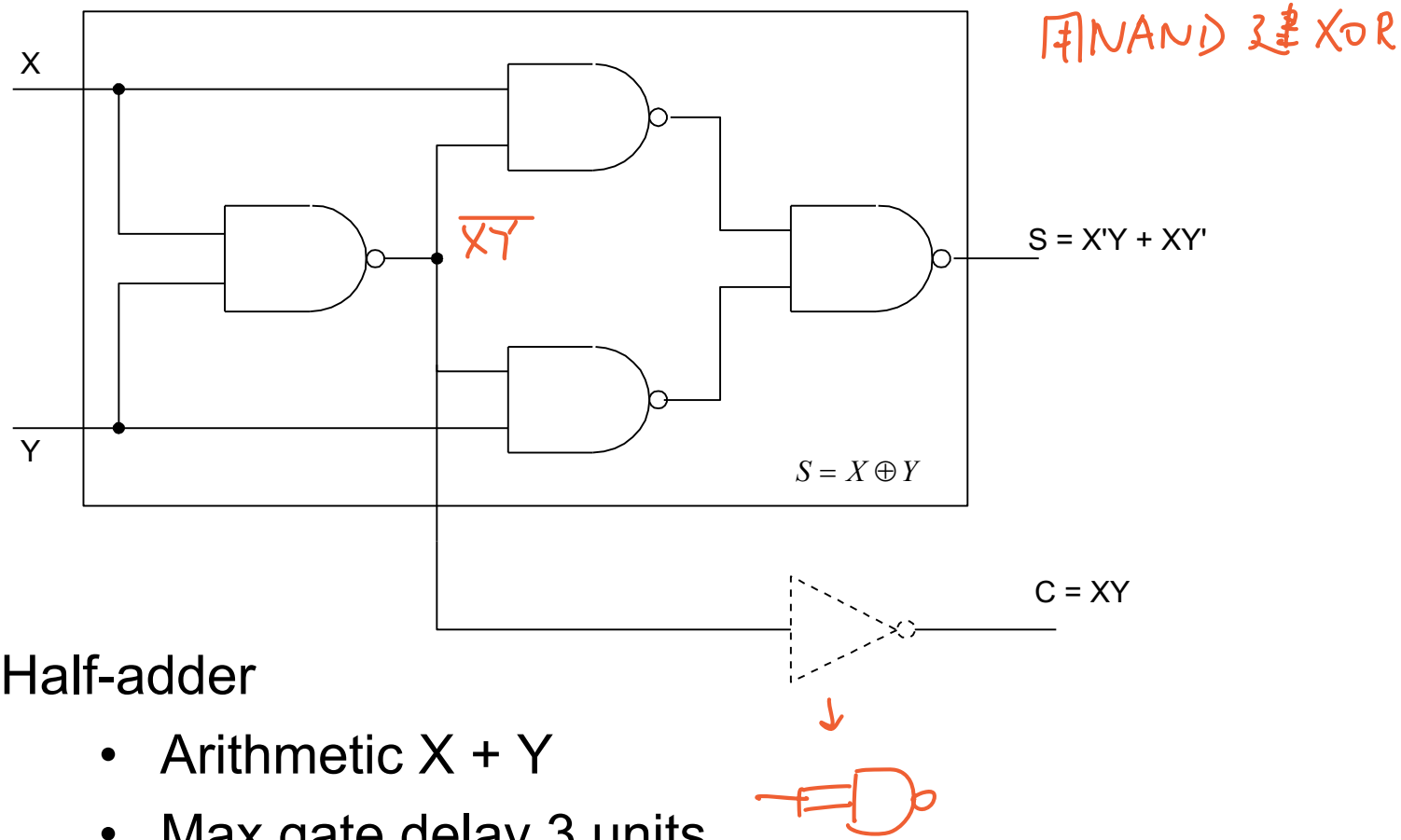

Half-adder

- Arithmetic X + Y
- Max gate delay 3 units

  Sum has 3 units delay

  Carry has 2 units delay (*Carry'* has 1 unit delay)

Queen Mary University of London

Effect of Delay

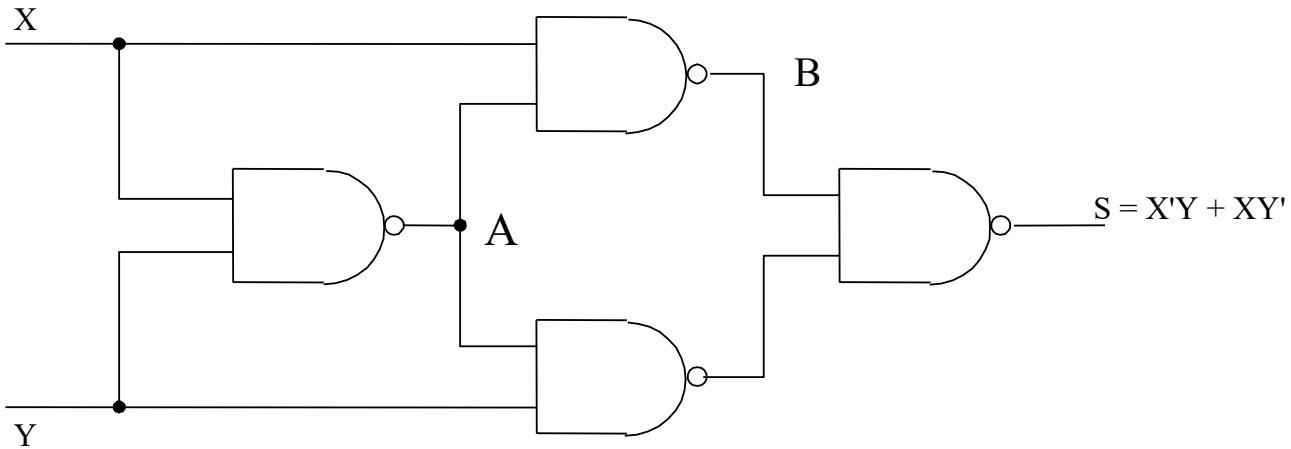

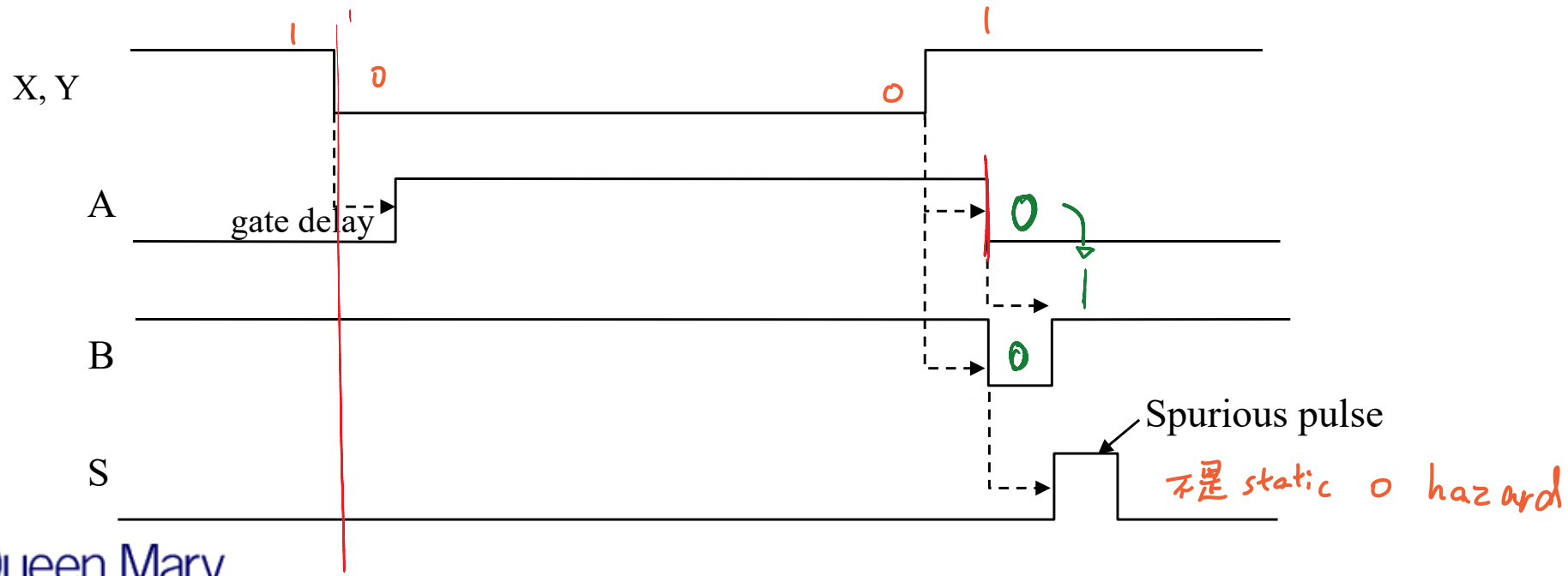

Full Adder

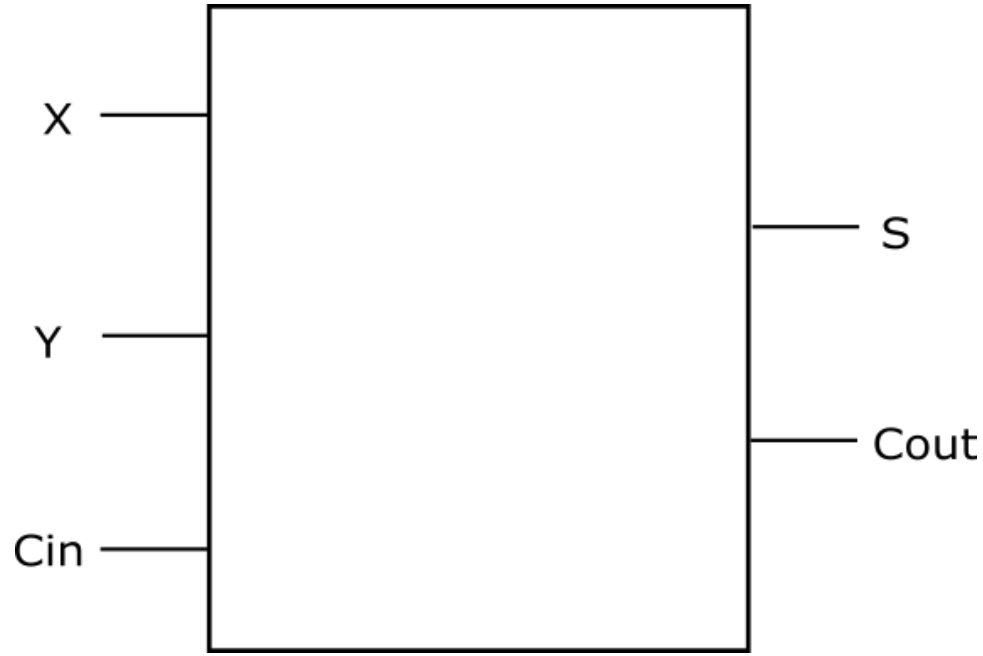

来自前一堂的

$$s = X \oplus Y \oplus \cancel{c_in}\ C_{in}$$

$$\cancel{c_out}\ C_{out} = (X.Y) + (X.\cancel{c_in}\ C_{in}) + (Y.\cancel{c_in}\ C_{in})$$

Full Adder

carry bit

C_{in}	X	Y	S	C_{out}
0	0	0	0	0
0	0	1	1	0
0	1	0	1	0
0	1	1	0	1
1	0	0	1	0
1	0	1	0	1
1	1	0	0	1
1	1	1	1	1

1+0=1

1+1=2 进1位

Cout

Cin \ XY	00	01	11	10
0	0	0	1	0
1	0	1	1	1

S

Cin \ XY	00	01	11	10
0	0	1	0	1
1	1	0	1	0

Queen Mary University of London

Full Adder

$$Cout = Cin.X + Cin.Y + X.Y$$

Cout, Cin \ XY	00	01	11	10
0	0	0	1	0
1	0	1	1	1

$$S = Cin'.X'.Y + Cin'.X.Y' + Cin.Y'.X' + Cin.X.Y$$

S, Cin \ XY	00	01	11	10
0	0	1	0	1
1	1	0	1	0

Queen Mary University of London

Full Adder gate implementations

Can be implemented with 2 half adders and an OR gate:

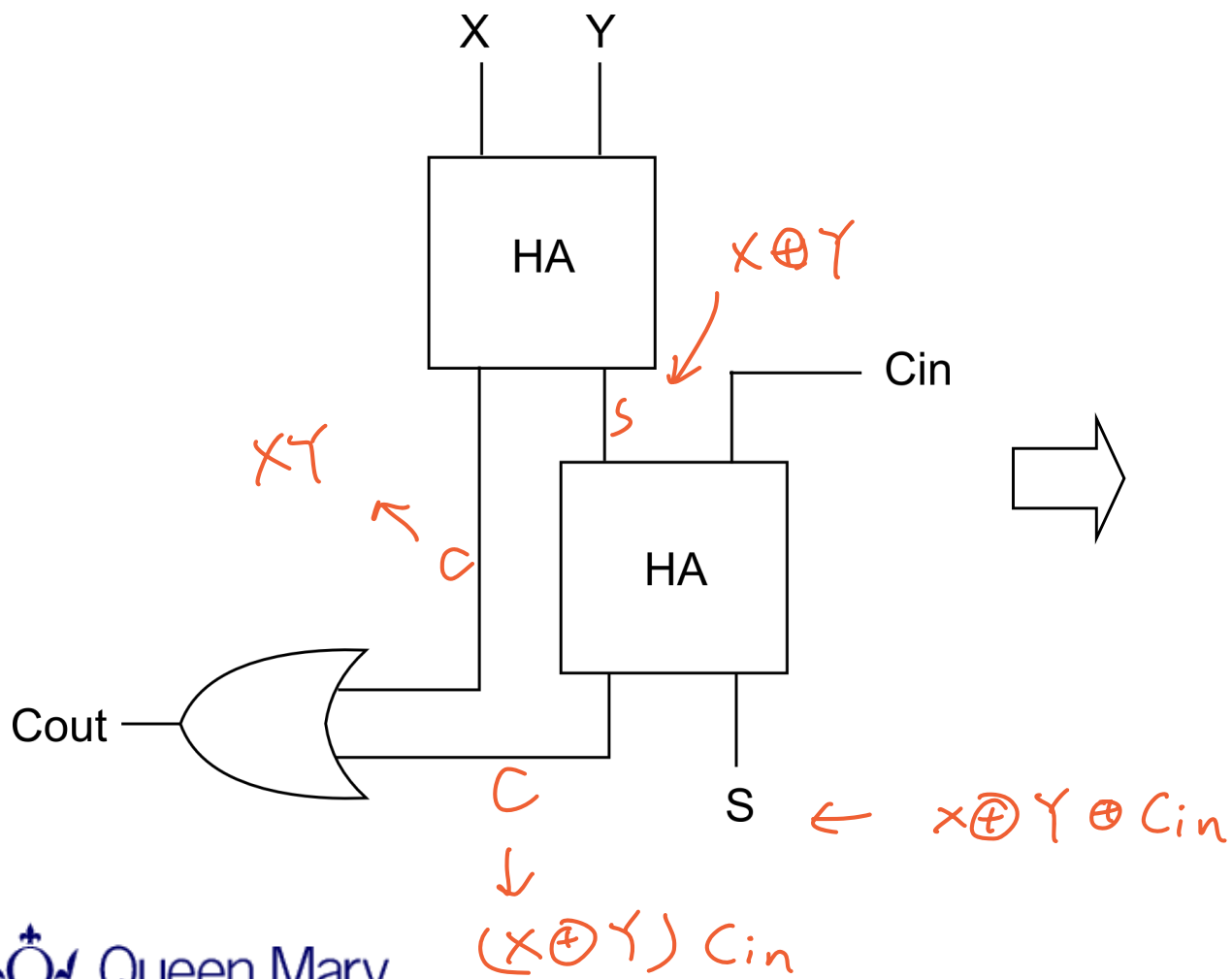

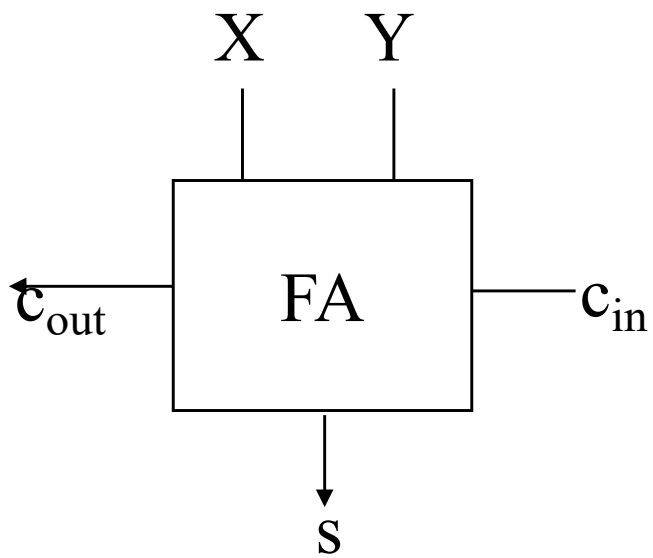

XY + (X⊕Y) Cin

XY + (X⊕Y)·Cin

Queen Mary University of London

6690 7355

Full Adder: NAND-based Ex-OR blocks

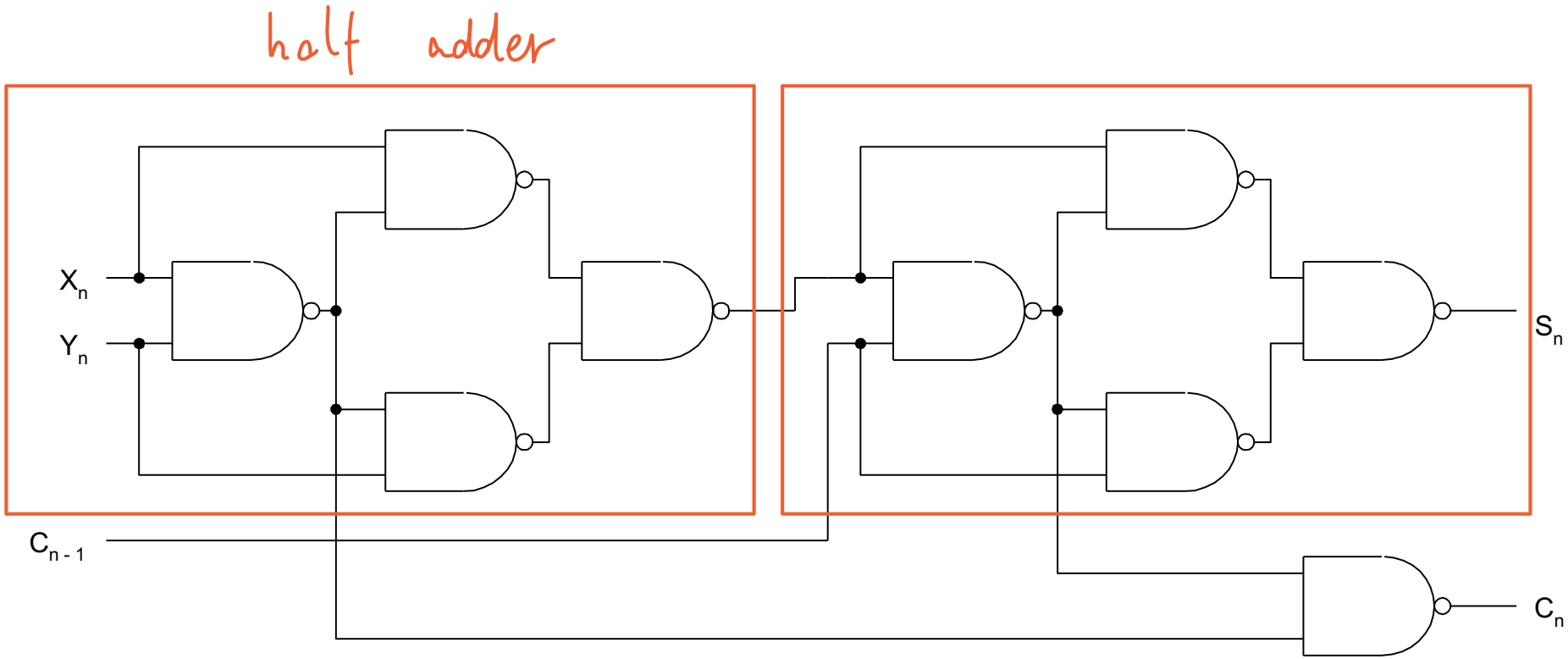

Consists essentially of two half-adders (XORs with Carry outputs)

Queen Mary
University of London

4-bit Parallel Adder

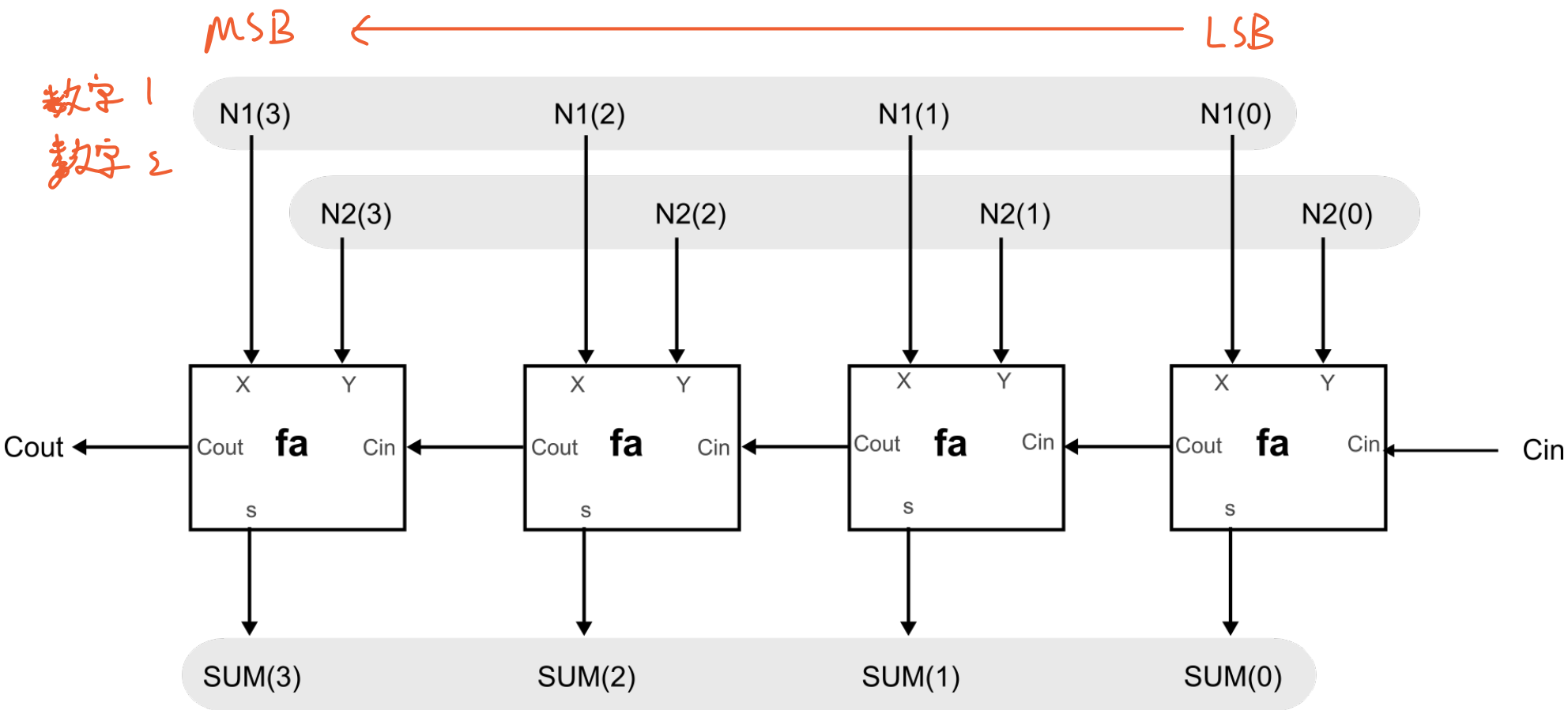

Queen Mary
University of London

4-bit Parallel Adder

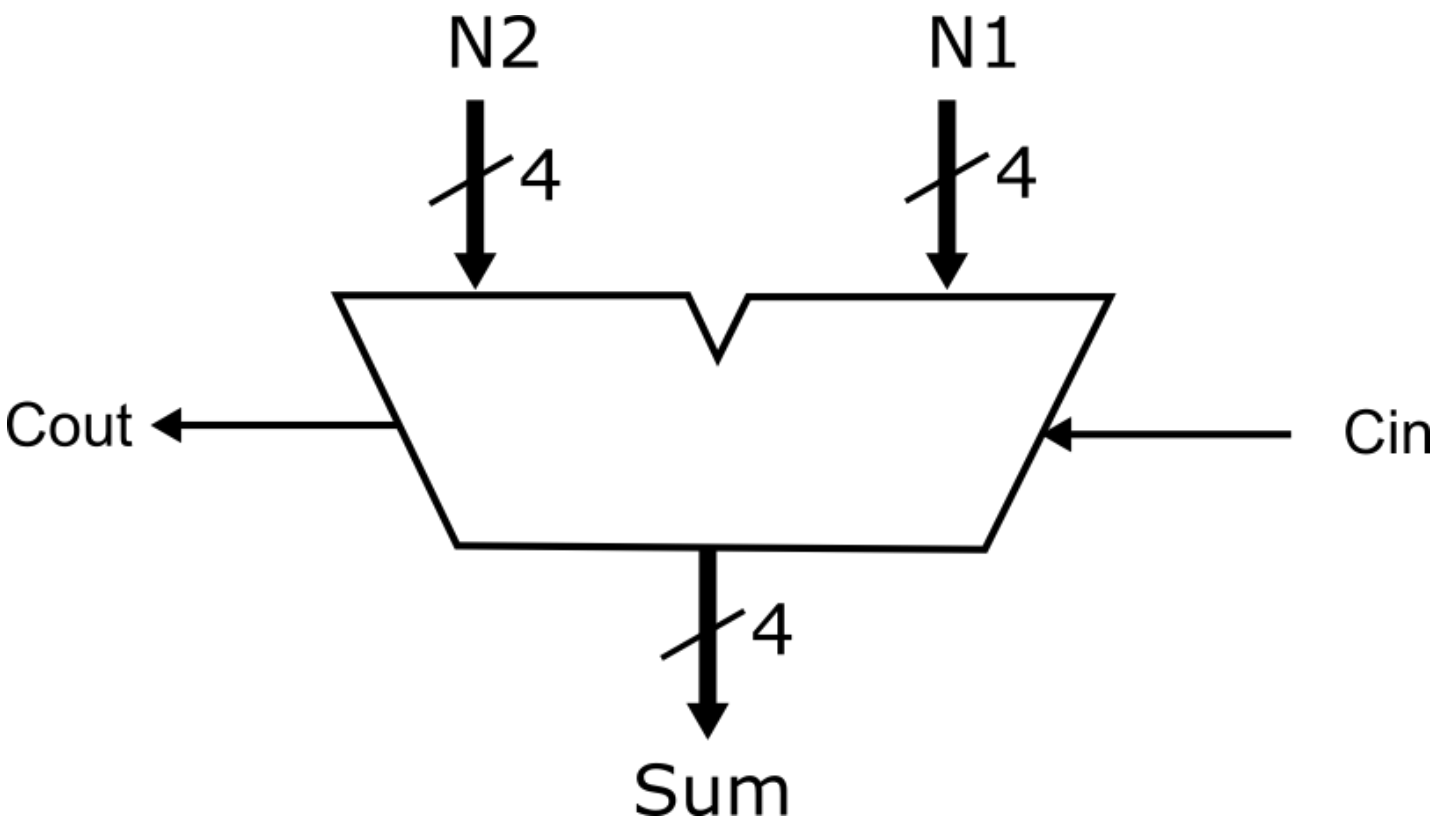

Queen Mary
University of London

Ripple Delay

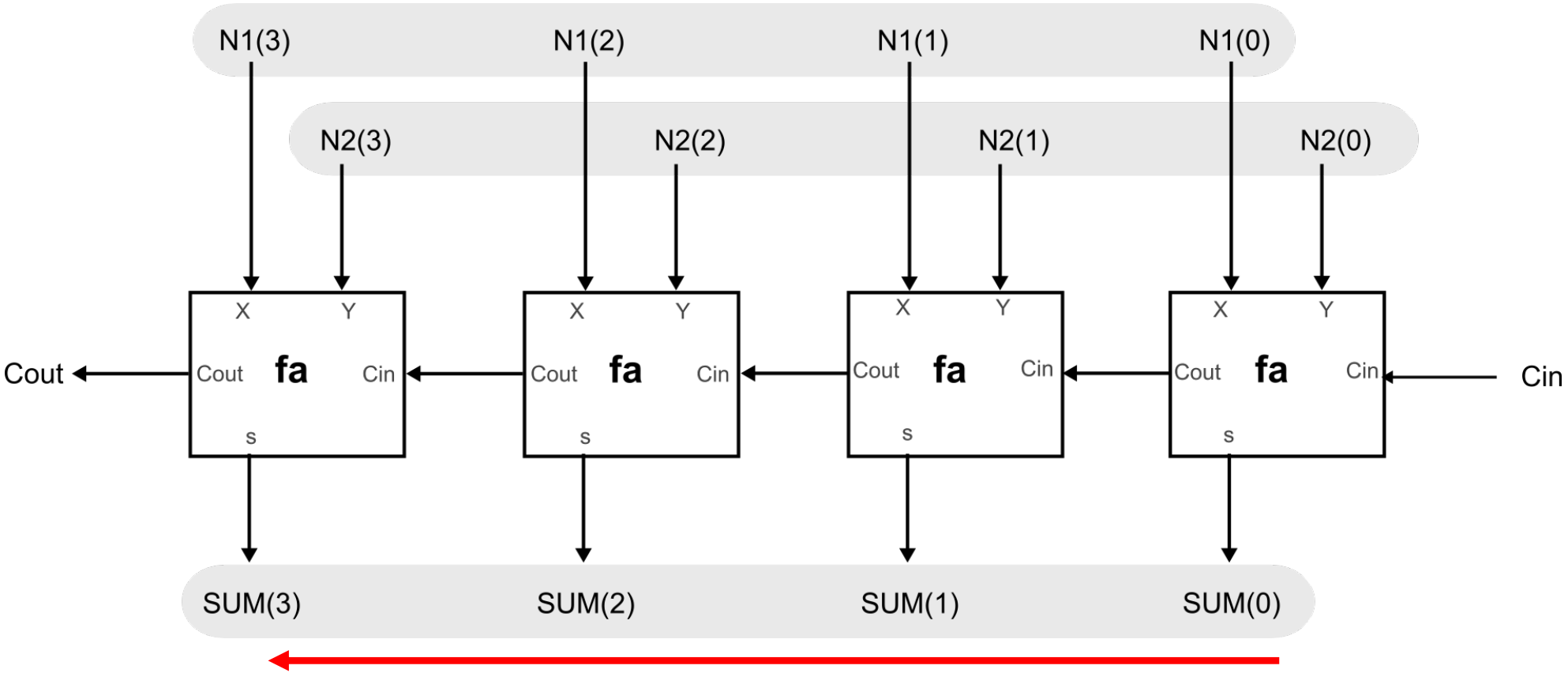

Delay caused by carry outputs at each stage

Queen Mary
University of London

4-bit Ripple Subtractor using Adders

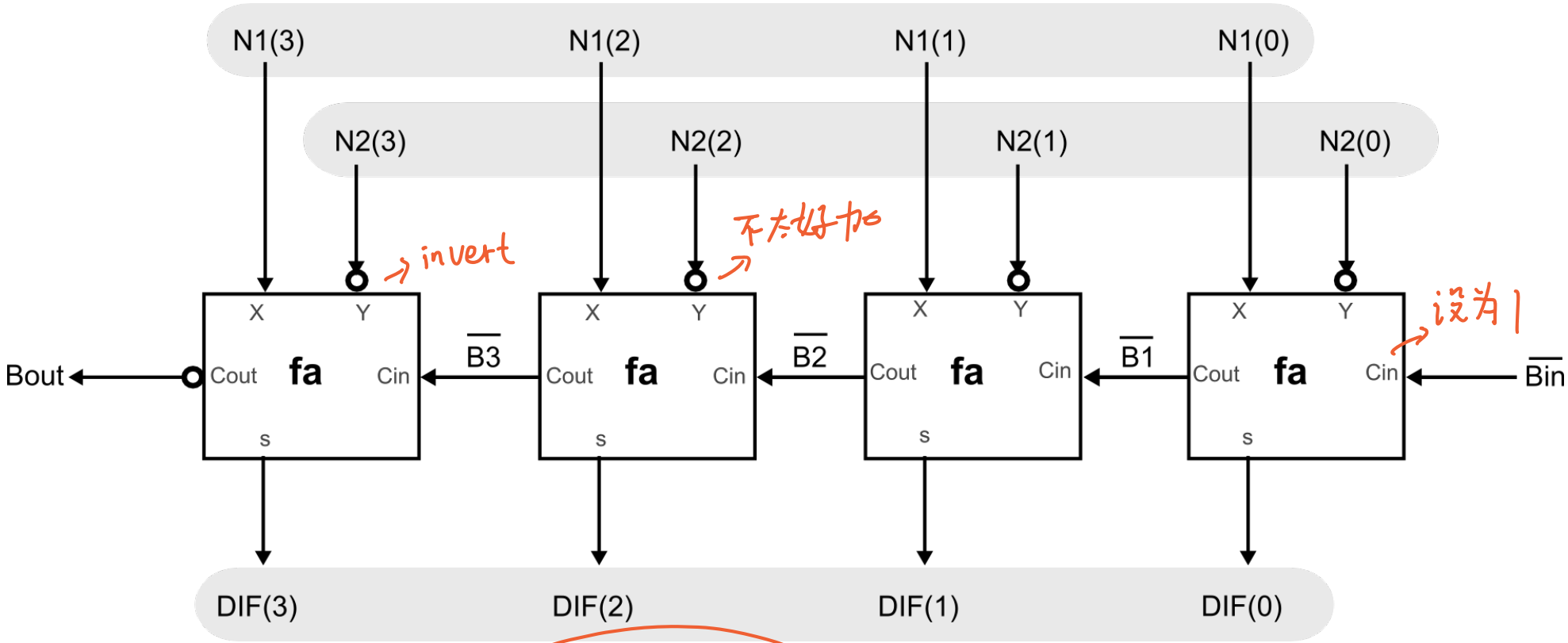

Use two's complement: A-B= A+(B'+1)

4-bit Adder/Subtractor

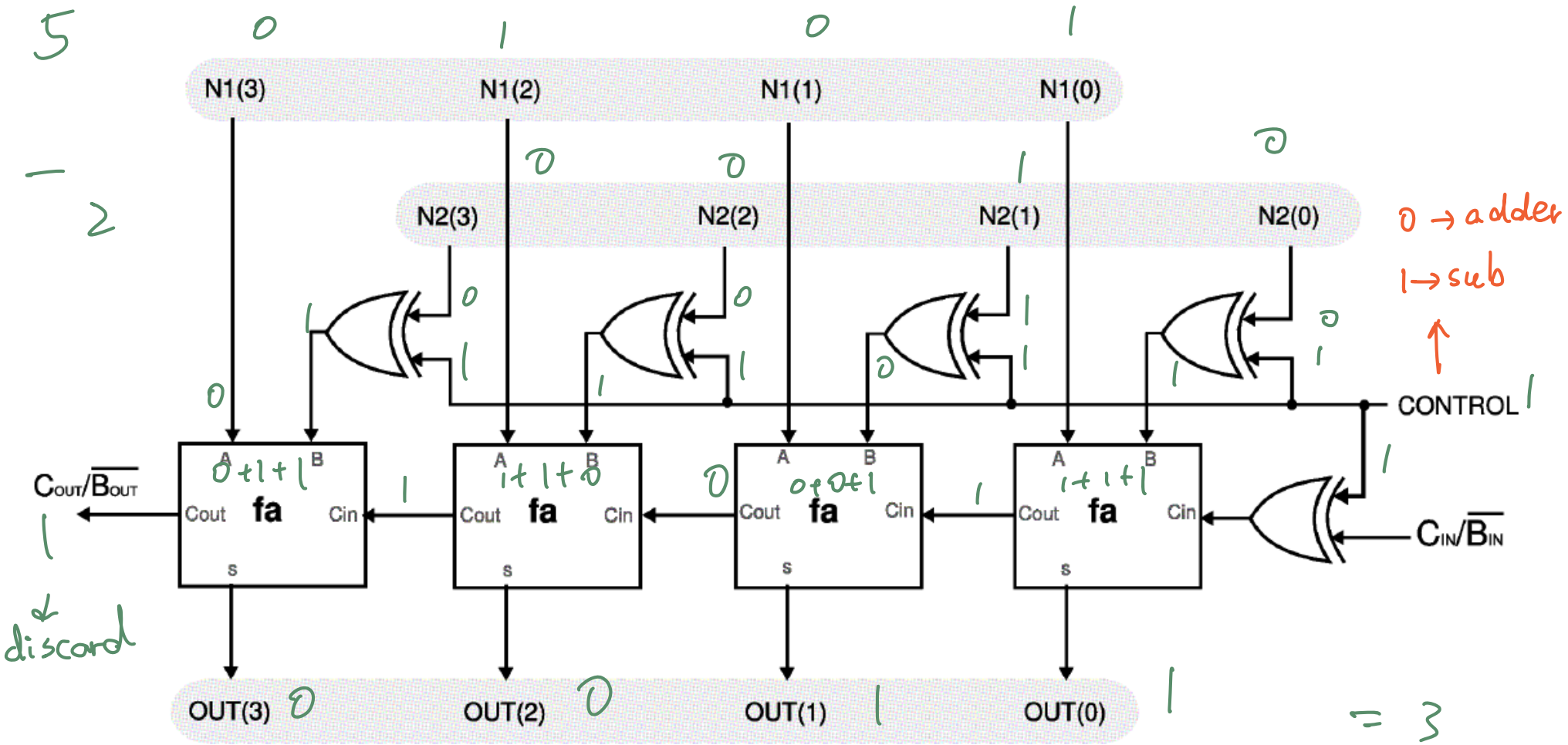

$x \oplus 0 = x$

$x \oplus 1 = x'$

4-bit Adder/Subtractor

2input 4 bit

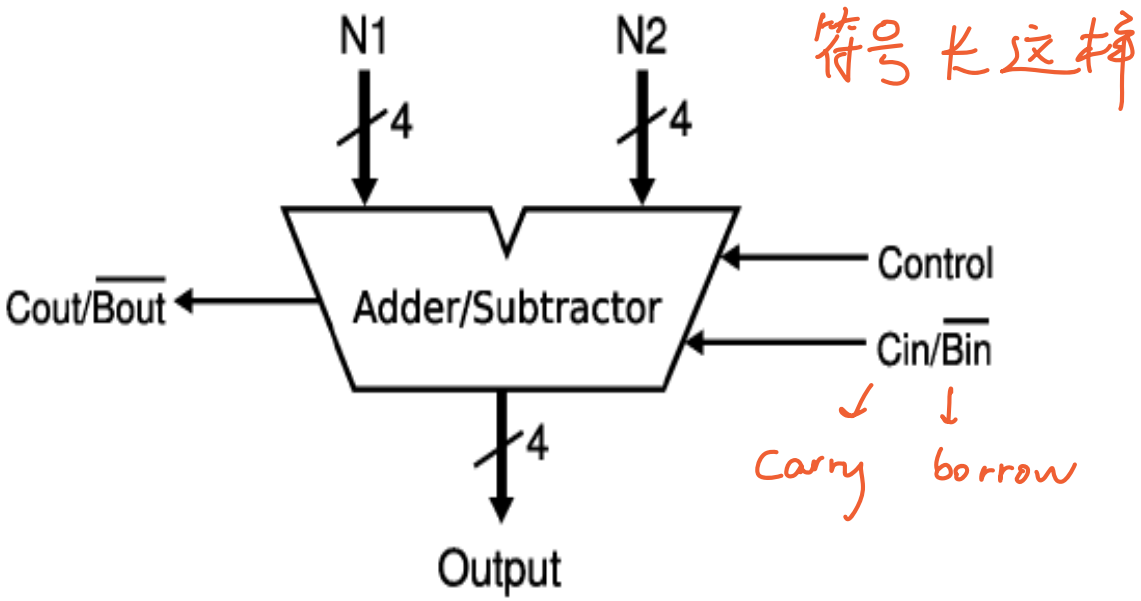

Control	Output Function
0	Add (N1 + N2)
1	Subtract (N1 – N2)

An Arithmetic Unit

ALU

arithmetic logic unit

Control 1	Control 0	Arithmetic Function
0	0	A + 1 → i++
0	1	A + B
1	0	A - 1
1	1	A - B

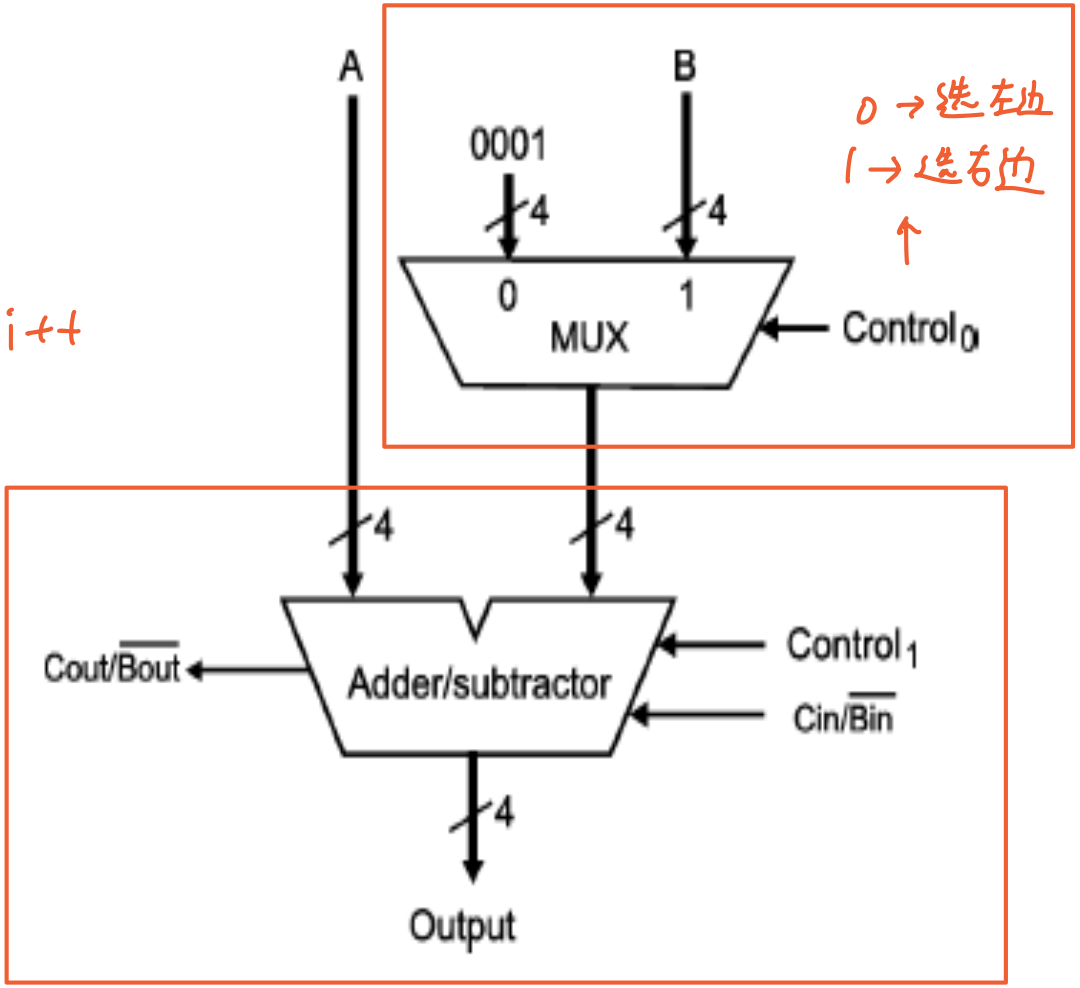

An Arithmetic Unit

- Can add and subtract
- Can also make it increment and decrement by 1
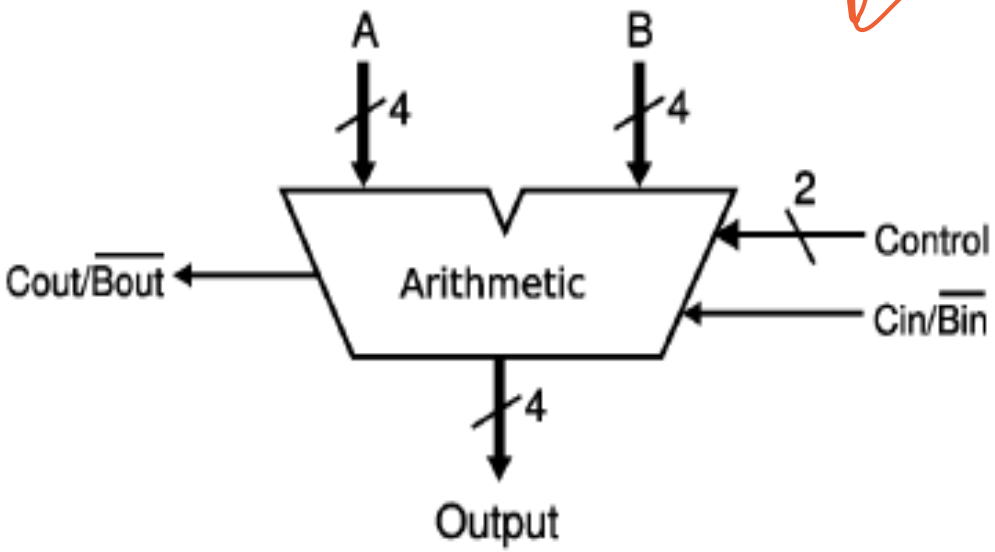
Control 1	Control 0	Arithmetic Function
0	0	A + 1
0	1	A + B
1	0	A - 1
1	1	A - B